UNIVERSITY OF CAMBRIDGE INTERNATIONAL EXAMINATIONS
International General Certificate of Secondary Education

CANDIDATE NAME	

CENTRE NUMBER						CANDIDATE NUMBER					

PHYSICS **0625/21**

Paper 2 Core **May/June 2013**

1 hour 15 minutes

Candidates answer on the Question Paper.

No Additional Materials are required.

READ THESE INSTRUCTIONS FIRST

Write your Centre number, candidate number and name on all the work you hand in.
Write in dark blue or black pen.
You may use a pencil for any diagrams or graphs.
Do not use staples, paper clips, highlighters, glue or correction fluid.
DO **NOT** WRITE IN ANY BARCODES.

Answer **all** questions.
Electronic calculators may be used.
You may lose marks if you do not show your working or if you do not use appropriate units.
Take the weight of 1 kg to be 10 N (i.e. acceleration of free fall = 10 m / s^2).

At the end of the examination, fasten all your work securely together.
The number of marks is given in brackets [ ] at the end of each question or part question.

For Examiner's Use	
1	
2	
3	
4	
5	
6	
7	
8	
9	
10	
11	
12	
Total	

This document consists of **18** printed pages and **2** blank pages.

DC (SJF/CGW) 58289/4
© UCLES 2013

UNIVERSITY of CAMBRIDGE International Examinations

[Turn over

www.root19.com +91 - 9969 353 391

BLANK PAGE

© UCLES 2013
www.root19.com

+91 - 9969 353 391

For Examiner's Use

1 Some liquid is poured into the measuring cylinder shown in Fig. 1.1.

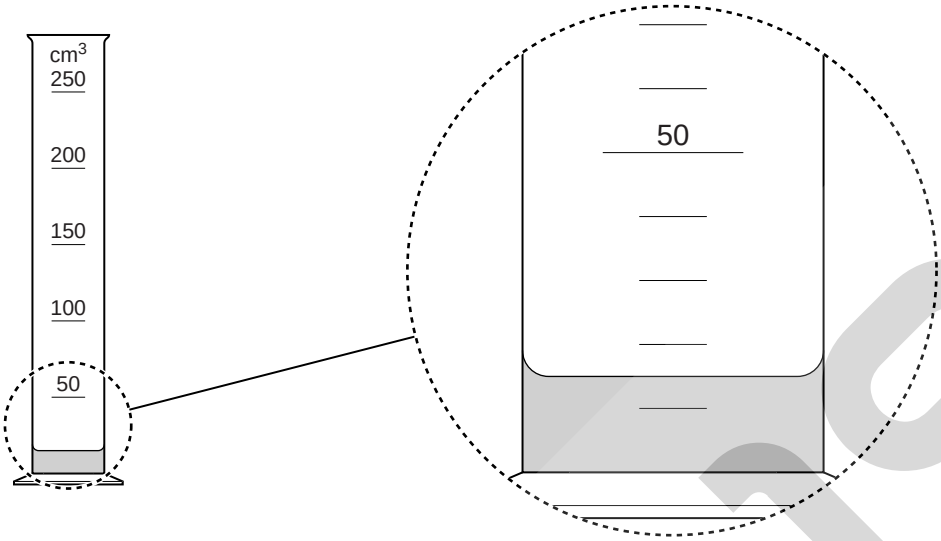

Fig. 1.1

(a) Use Fig. 1.1 to estimate the volume of the liquid.

volume = ... cm^3 [1]

(b) **On the enlarged part of Fig. 1.1**, draw the liquid level when another 25 cm^3 of liquid has been added to the measuring cylinder. [1]

(c) Explain why it would be more accurate to use a narrower measuring cylinder to measure liquid volumes like that in Fig. 1.1.

.....

.....

..... [1]

[Total: 3]

© UCLES 2013
www.root19.com

+91 - 9969 353 301

For Examiner's Use

2 **(a)** Fig. 2.1 shows a brick.

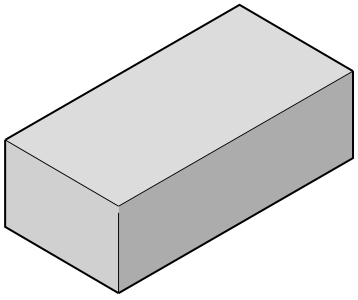

Fig. 2.1

500 bricks like the one shown in Fig. 2.1 are stacked on a wooden platform, known as a pallet. The pallet of bricks is to be loaded on to a lorry by means of a fork-lift truck, as shown in Fig. 2.2.

Fig. 2.2

Each brick has a volume of $0.0012\,m^3$ and is made of a material of density $2300\,kg/m^3$.

(i) Calculate the mass of one brick.

mass = ... kg [3]

www.root19.com +91 - 9969 353 391

For Examiner's Use

(ii) The fork-lift truck can safely lift a load of mass 2 tonnes (2000 kg). The wooden pallet has a mass of 100 kg.

1. Calculate the total mass of the pallet and 500 bricks.

total mass = ... kg

2. Is it safe for the fork-lift truck to lift the total mass of the pallet and 500 bricks?

yes ☐

no ☐

[3]

(b) The brick shown in Fig. 2.3 has the same dimensions as the brick in Fig. 2.1 and is made of the same material. However, this brick has a hollow in one face.

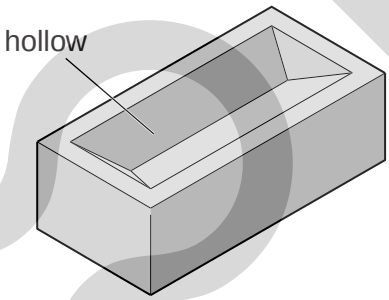

Fig. 2.3

Complete the following sentences.

(i) The density of the brick in Fig. 2.3 is …… the density of the brick in Fig. 2.1, because …….

……. .

(ii) The mass of the brick in Fig. 2.3 is …… the mass of the brick in Fig. 2.1.

[2]

[Total: 8]

www.root19.com +91 - 9969 3[illegible]

For Examiner's Use

3 Fig. 3.1 shows a man pulling a truck of logs at a constant speed along a level path from P to Q against a resistive (frictional) force.

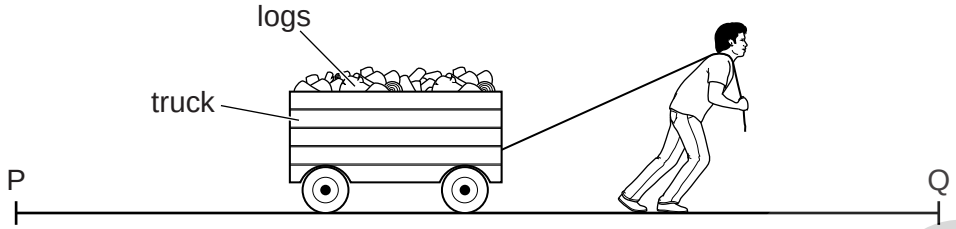

Fig. 3.1

(a) State the two quantities, and their units, that must be measured in order to calculate the work done on the truck.

quantity	unit

[2]

(b) State the additional quantity needed in order to calculate the useful power of the man.

..... [1]

(c) On another occasion, there is a smaller number of logs in the truck. The resistive force on the truck is smaller when the truck is pulled from P to Q at the **same speed** as before.

What effect does this have on

(i) the force exerted by the man,

.....

(ii) the work done by the man,

.....

(iii) the useful power of the man?

.....

[3]

(d) What form of energy stored in his body does the man use to pull the truck of logs?

..... [1]

[Total: 7]

© UCLES 2013
www.root19.com

+91 - 9969 353 391

4 Fig. 4.1 shows a typical laboratory liquid-in-glass thermometer.

For Examiner's Use

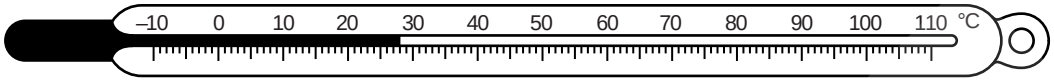

Fig. 4.1

(a) Name a liquid that is likely to be used in this thermometer.

..... [1]

(b) What occupies the space in the tube, between the end of the liquid thread and the end of the tube?

..... [1]

(c) On Fig. 4.1, clearly indicate and label

(i) the ice point,

(ii) the steam point.

[2]

(d) The thermometer is moved into a hotter place.

(i) State what happens to the position of the end of the liquid thread.

.....

.....

(ii) Explain why this happens.

.....

.....

[2]

[Total: 6]

© UCLES 2013
www.root19.com

+91 - 9969 353 301

For Examiner's Use

5 A family goes on holiday in a car. To stop the journey being boring for the children, every half an hour they note down the distance they have travelled since they left home. They then plot the graph shown in Fig. 5.1.

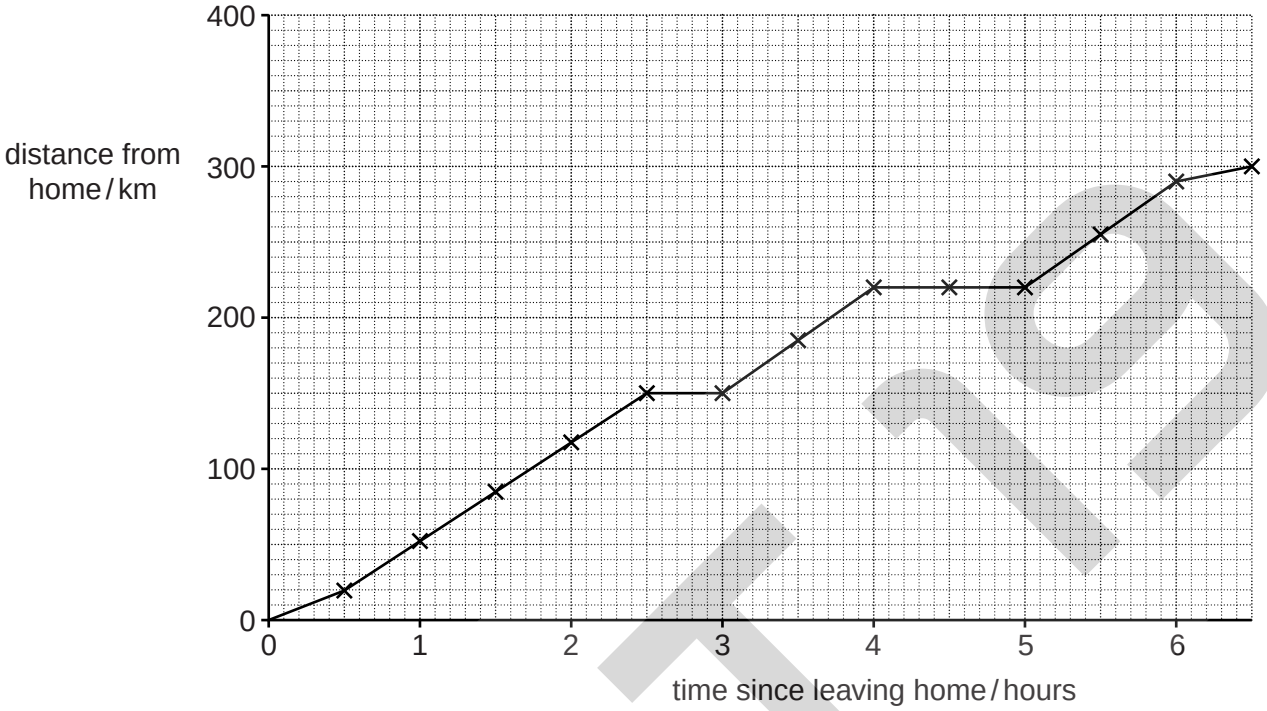

Fig. 5.1

The first half hour and the last half hour of their journey are on small roads. The rest of the journey is on major roads.

Answer the following questions using information from Fig. 5.1.

(a) For how many hours were they travelling on major roads?

time = ... hours [1]

(b) How far did they travel

(i) in total,

total distance = ... km

(ii) on small roads,

distance on small roads = ... km

(iii) on major roads?

distance on major roads = ... km
[3]

www.root19.com +91 - 9969 353 391

For Examiner's Use

(c) They had two refreshment stops whilst on the journey.

On Fig. 5.1, clearly mark where they had these stops. [1]

(d) Apart from the times when they stopped, during which section of the journey was their speed slowest? Explain your answer.

section .....

explanation .....

.....
[2]

(e) Calculate the average speed for the whole journey. Your answer must include the unit.

average speed = ... [4]

[Total: 11]

© UCLES 2013
www.root19.com

+91 - 9969 353 301

For Examiner's Use

6 A manometer is being used to measure the pressure of the gas in a container, as shown in Fig. 6.1.

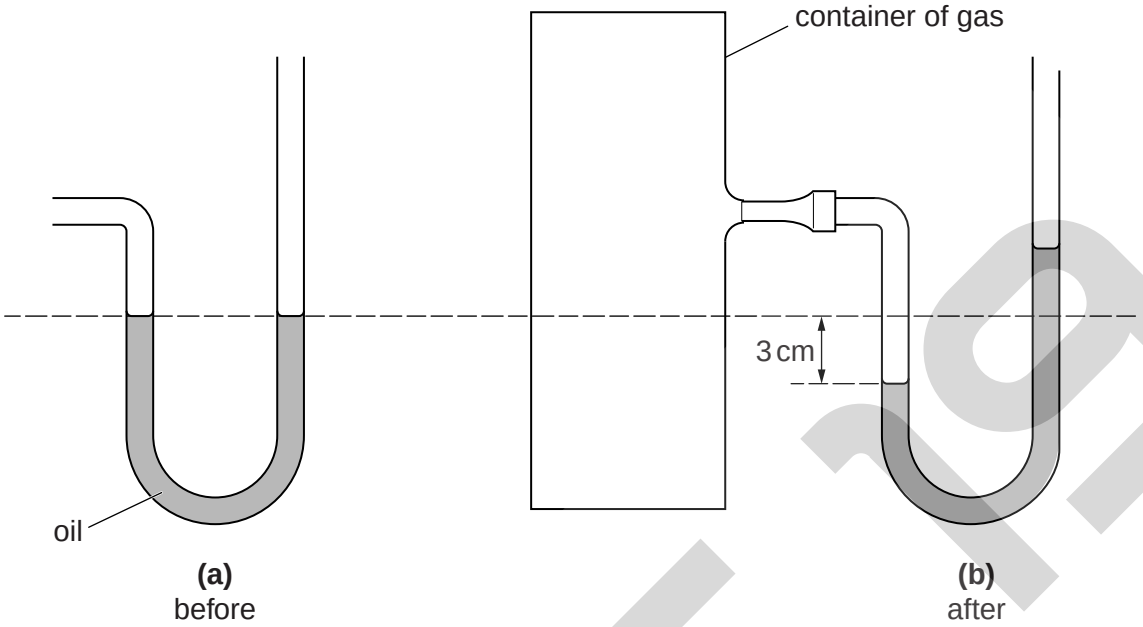

Fig. 6.1

(a) The appearance of the oil in the manometer before connecting it to the container is shown in Fig. 6.1(a).

Explain why the oil levels are the same in both limbs of the manometer.

.....

..... [1]

(b) Fig. 6.1(b) shows the oil levels after connecting to the container.

By how much does the gas pressure in the container differ from atmospheric pressure? Tick one box.

3 cm of oil greater than atmospheric pressure ☐

3 cm of oil less than atmospheric pressure ☐

6 cm of oil greater than atmospheric pressure ☐

6 cm of oil less than atmospheric pressure ☐ [1]

www.root19.com +91 - 9969 353 391

For Examiner's Use

(c) When the gas in the container is heated, the pressure rises.

(i) What happens to the oil level

1. in the left-hand limb, ...

2. in the right-hand limb? .....
[1]

(ii) Explain, in terms of molecules, why the pressure of the gas rises when it is heated.

.....

.....

.....

.....

.....[3]

[Total: 6]

© UCLES 2013
www.root19.com

+91 - 9969 353 301

For Examiner's Use

7 The apparatus in Fig. 7.1 is producing a visible spectrum from a filament lamp (white light source).

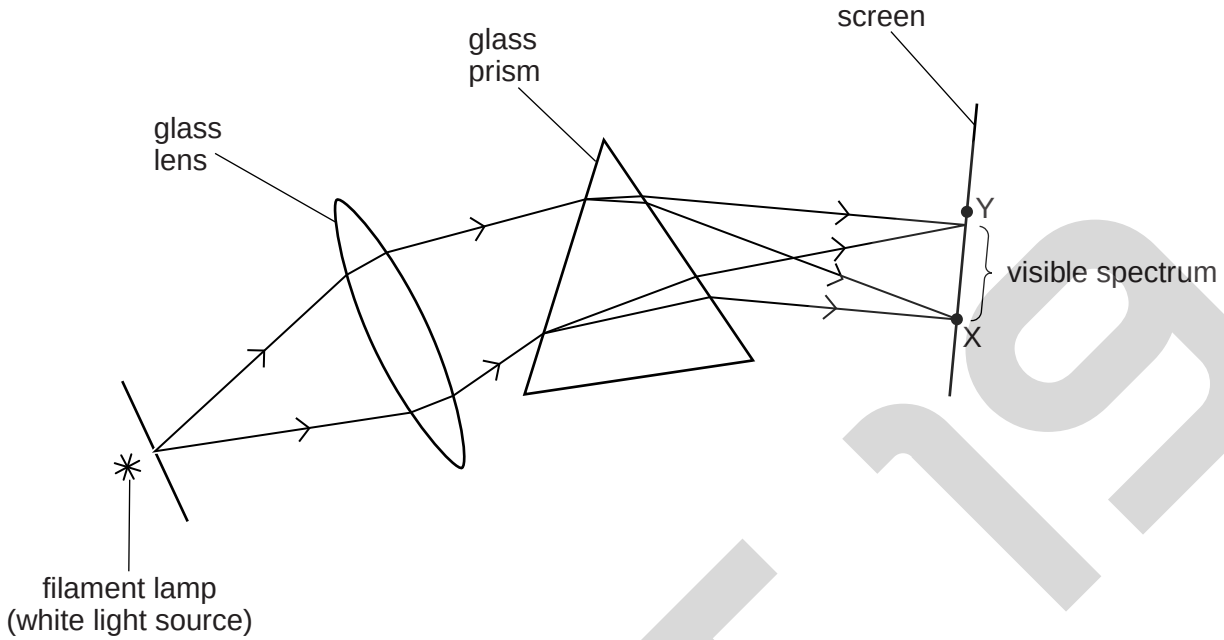

Fig. 7.1

(a) Which two things is the lens in Fig. 7.1 doing to the light?

Tick **two** boxes.

- refracting ☐
- reflecting ☐
- converging ☐
- diverging ☐ [2]

(b) Which two things is the prism in Fig. 7.1 doing to the light?

Tick **two** boxes.

- diffracting ☐
- dispersing ☐
- focusing ☐
- refracting ☐ [2]

(c) Which colour light will be seen at point X, at the bottom edge of the visible spectrum?

..... [1]

www.root19.com +91 - 9969 353 391

For Examiner's Use

(d) A sensitive thermometer shows a small rise in temperature when held at point Y, just above the top edge of the visible spectrum.

(i) Which type of electromagnetic radiation is the thermometer detecting?

.....

(ii) Suggest why this radiation is present.

.....
[2]

[Total: 7]

© UCLES 2013
www.root19.com

+91 - 9969 353 301

For Examiner's Use

8 **(a)** Fig. 8.1 is a ray diagram of parallel rays passing through a lens.

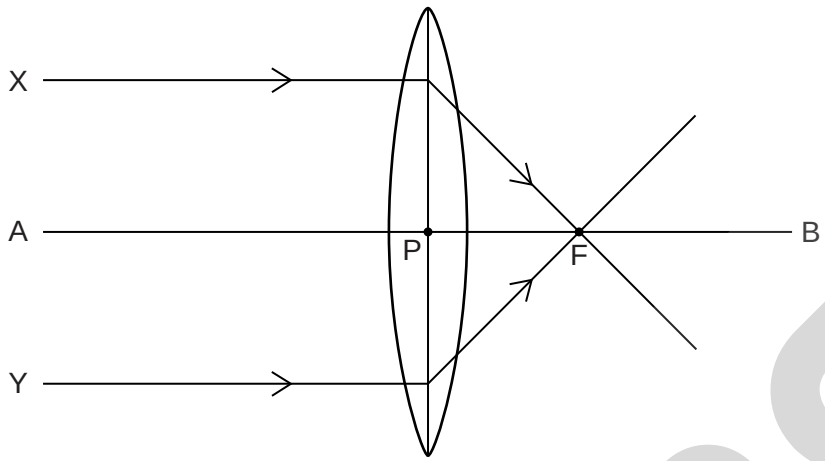

Fig. 8.1

(i) State the name given to point F.

.....

(ii) Which distance is the focal length of the lens?

.....

[2]

(b) Fig. 8.2 is another drawing of the same lens as in Fig. 8.1, with an object AX placed in front of it.

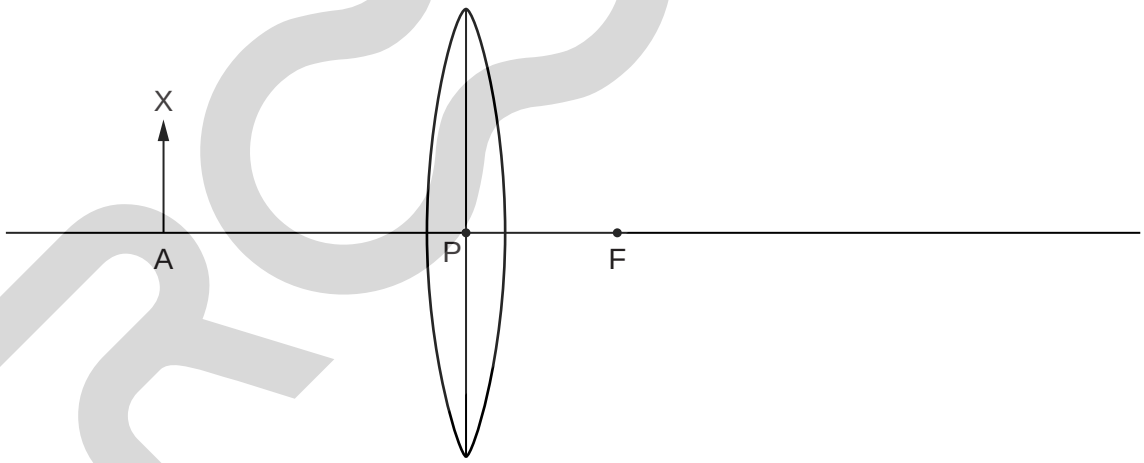

Fig. 8.2

(i) On Fig. 8.2, draw two rays to locate the image of point X. Label this point Z.

(ii) On Fig. 8.2, draw in the image of AX, and label it "image".

[4]

[Total: 6]

www.root19.com +91 - 9969 353 391

For Examiner's Use

9 **(a)** Which electrical quantity is described as "the flow of charge"? Tick one box.

current ☐

electromotive force ☐

potential difference ☐

power ☐

resistance ☐ [1]

(b) Fig. 9.1 shows a circuit in which switch S is open. The battery and ammeter have resistances that can be ignored.

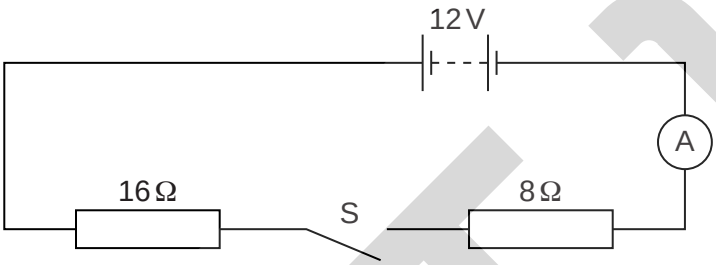

Fig. 9.1

(i) Switch S is closed.

Calculate

1. the combined resistance of the two resistors,

resistance = ... Ω [2]

2. the reading on the ammeter. Include the unit.

ammeter reading = ... [4]

(ii) Switch S is opened again.

State, including units,

1. the reading on the ammeter,

ammeter reading = ... [1]

2. the potential difference across the battery.

potential difference = ... [1]

[Total: 9]

© UCLES 2013
www.root19.com

+91 - 9969 353 301

For Examiner's Use

10 The circuit for adjusting the brightness of the lamp in the display panel of a car is shown in Fig. 10.1.

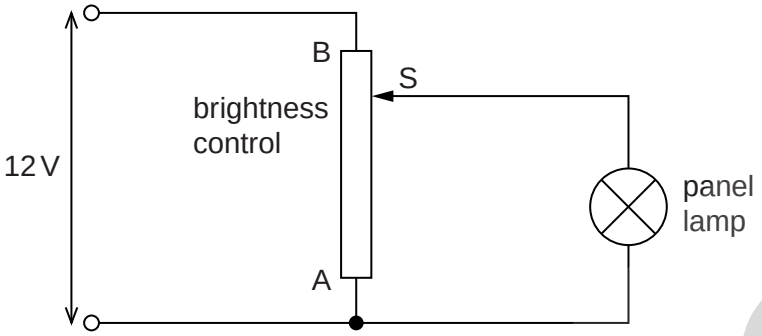

Fig. 10.1

The brightness control is uniformly wound with resistance wire and has a sliding contact S.

(a) State the name of the component used as the brightness control.

..... [1]

(b) State the potential difference across the panel lamp when

(i) S is at end A, …… V

(ii) S is at end B. …… V

[2]

(c) Describe what happens to the brightness of the lamp as S is moved **from A to B**.

.....

..... [2]

[Total: 5]

© UCLES 2013
www.root19.com

+91 - 9969 353 391

For Examiner's Use

11 (a) Fig. 11.1 shows the cross-section of a horizontal wire carrying a current. The wire is positioned between the poles of a large horseshoe magnet.

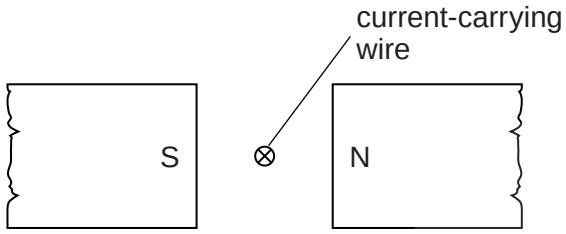

Fig. 11.1

The wire is perpendicular to the page and the direction of the current is into the page.

There is a force on the wire due to the current being in a magnetic field. This magnetic force balances the weight of the wire.

In which direction is the magnetic force on the wire? Tick one box.

towards the N pole ☐

towards the S pole ☐

towards the top of the page ☐

perpendicularly out of the page ☐ [1]

© UCLES 2013
www.root19.com

+91 - 9969 353 301

For Examiner's Use

(b) Two pieces of bare wire are fixed to terminals on a wooden board. A third piece of bare wire X rests on the other two and is free to move.

This is shown in Fig. 11.2.

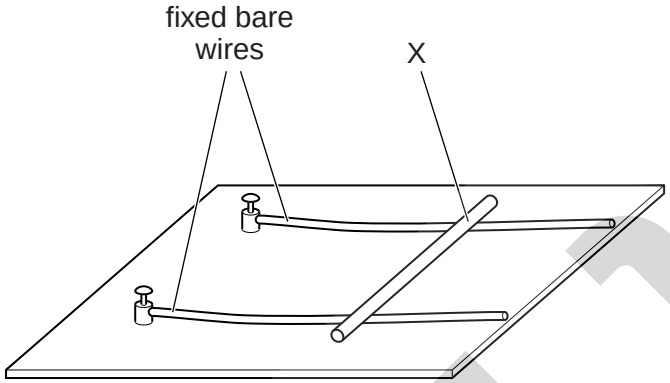

Fig. 11.2

You are given a 6 V battery and a strong horseshoe magnet.

On Fig. 11.2, show how you would use the battery and the magnet to make X move along the two fixed wires. [3]

[Total: 4]

www.root19.com +91 - 9969 353 391

For Examiner's Use

12 **(a)** Complete the table below.

In the centre column, state whether the particle is inside or outside the nucleus.

In the right-hand column, state whether the particle has a positive charge or a negative charge or no charge.

particle	position	charge	
proton			[2]
electron			[2]
neutron			[2]

(b) Which of the particles in the above table

(i) is the same as a β-particle, ...

(ii) makes up cathode rays? .....
[2]

[Total: 8]

© UCLES 2013
www.root19.com

+91 - 9969 353 391

BLANK PAGE

Permission to reproduce items where third-party owned material protected by copyright is included has been sought and cleared where possible. Every reasonable effort has been made by the publisher (UCLES) to trace copyright holders, but if any items requiring clearance have unwittingly been included, the publisher will be pleased to make amends at the earliest possible opportunity.

University of Cambridge International Examinations is part of the Cambridge Assessment Group. Cambridge Assessment is the brand name of University of Cambridge Local Examinations Syndicate (UCLES), which is itself a department of the University of Cambridge.

www.root19.com +91 - 9969 353 391